

RING 1

Item code	85.FL90.100P3.03.AHEA
Product type	Outdoor
Category	Floodlight
Family	RING
Subfamily	RING 1
Pictograms	CRI 80 · CE · IP 67 · DALI

Dimensions	
Product dimensions (mm)	φ240*H295mm
Mounting arm dimensions (mm)	Custom-made

Product	
Real power (W)	100
Real luminous flux (Lm)	9207
Luminous efficiency (Lm/W)	93
Input	AC 220-230V 50Hz
Beam angle (º)	90°
Life time (h)	50000h L90 B10
IP	67
Driver	Included-Integrated
Control gear	DALI 2
Net weight (g)	7500g
Colour temperature (K)	3000K
Colour consistency (SDCM)	SDCM2
CRI	80
IK	08

Scheme

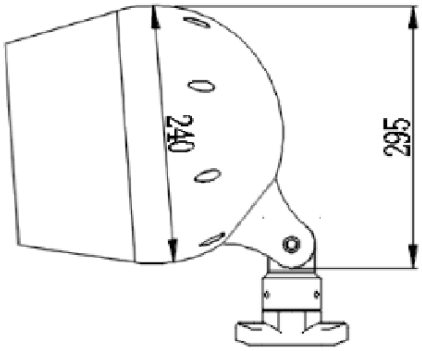

Accessories



90º prismatic diffraction lens